UNIVERSITY OF CAMBRIDGE INTERNATIONAL EXAMINATIONS
General Certificate of Education
Advanced Subsidiary Level and Advanced Level

CANDIDATE NAME									
CENTRE NUMBER						CANDIDATE NUMBER				

2059499789

PHYSICS **9702/21**

Paper 2 AS Structured Questions **May/June 2010**

1 hour

Candidates answer on the Question Paper.

No Additional Materials are required.

READ THESE INSTRUCTIONS FIRST

Write your Centre number, candidate number and name on all the work you hand in.
Write in dark blue or black pen.
You may use a soft pencil for any diagrams, graphs or rough working.
Do not use staples, paper clips, highlighters, glue or correction fluid.
DO **NOT** WRITE IN ANY BARCODES.

Answer **all** questions.
You may lose marks if you do not show your working or if you do not use appropriate units.

At the end of the examination, fasten all your work securely together.
The number of marks is given in brackets [ ] at the end of each question or part question.

For Examiner's Use	
1	
2	
3	
4	
5	
6	
7	
Total	

This document consists of **17** printed pages and **3** blank pages.

© UCLES 2010

Data

speed of light in free space,	$c = 3.00 \cdot 10^{8}\ \text{m s}^{-1}$
permeability of free space,	$\mu_0 = 4\pi \cdot 10^{-7}\ \text{H m}^{-1}$
permittivity of free space,	$\varepsilon_0 = 8.85 \cdot 10^{-12}\ \text{F m}^{-1}$
elementary charge,	$e = 1.60 \cdot 10^{-19}\ \text{C}$
the Planck constant,	$h = 6.63 \cdot 10^{-34}\ \text{J s}$
unified atomic mass constant,	$u = 1.66 \cdot 10^{-27}\ \text{kg}$
rest mass of electron,	$m_e = 9.11 \cdot 10^{-31}\ \text{kg}$
rest mass of proton,	$m_p = 1.67 \cdot 10^{-27}\ \text{kg}$
molar gas constant,	$R = 8.31\ \text{J K}^{-1}\ \text{mol}^{-1}$
the Avogadro constant,	$N_A = 6.02 \cdot 10^{23}\ \text{mol}^{-1}$
the Boltzmann constant,	$k = 1.38 \cdot 10^{-23}\ \text{J K}^{-1}$
gravitational constant,	$G = 6.67 \cdot 10^{-11}\ \text{N m}^2\ \text{kg}^{-2}$
acceleration of free fall,	$g = 9.81\ \text{m s}^{-2}$

© UCLES 2010

Formulae

uniformly accelerated motion, $s = ut + \frac{1}{2}at^2$
$v^2 = u^2 + 2as$

work done on/by a gas, $W = p\Delta V$

gravitational potential, $\phi = -\frac{Gm}{r}$

hydrostatic pressure, $p = \rho gh$

pressure of an ideal gas, $p = \frac{1}{3}\frac{Nm}{V}\langle c^2 \rangle$

simple harmonic motion, $a = -\omega^2 x$

velocity of particle in s.h.m., $v = v_0 \cos \omega t$
$v = \pm \omega\sqrt{(x_0^2 - x^2)}$

electric potential, $V = \frac{Q}{4\pi\varepsilon_0 r}$

capacitors in series, $1/C = 1/C_1 + 1/C_2 + \ldots$

capacitors in parallel, $C = C_1 + C_2 + \ldots$

energy of charged capacitor, $W = \frac{1}{2}QV$

resistors in series, $R = R_1 + R_2 + \ldots$

resistors in parallel, $1/R = 1/R_1 + 1/R_2 + \ldots$

alternating current/voltage, $x = x_0 \sin \omega t$

radioactive decay, $x = x_0 \exp(-\lambda t)$

decay constant, $\lambda = \frac{0.693}{t_{\frac{1}{2}}}$

© UCLES 2010

[Turn over

BLANK PAGE

© UCLES 2010

Answer **all** the questions in the spaces provided.

1 A unit is often expressed with a prefix. For example, the gram may be written with the prefix 'kilo' as the kilogram. The prefix represents a power-of-ten. In this case, the power-of-ten is 10^3.

Complete Fig. 1.1 to show each prefix with its symbol and power-of-ten.

prefix	symbol	power-of-ten
kilo	k	10^3
nano	n	.....
centi	.....	10^{-2}
.....	M	10^6
.....	T	10^{12}

Fig. 1.1

[4]

2 **(a)** Complete Fig. 2.1 to show whether each of the quantities listed is a vector or a scalar.

	vector / scalar
distance moved	.....
speed	.....
acceleration	.....

Fig. 2.1

[3]

(b) A ball falls vertically in air from rest. The variation with time *t* of the distance *d* moved by the ball is shown in Fig. 2.2.

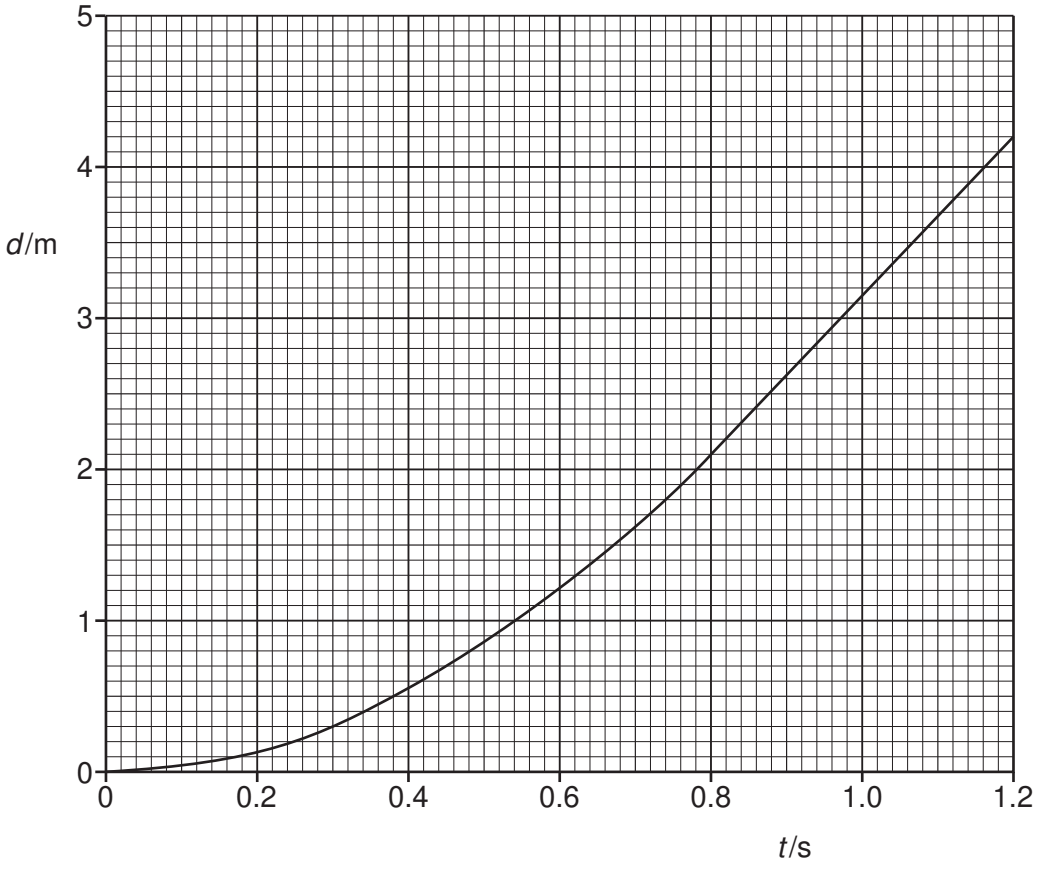

Fig. 2.2

© UCLES 2010

(i) By reference to Fig. 2.2, explain how it can be deduced that

1. the ball is initially at rest,

.....

.....

.....[2]

2. air resistance is not negligible.

.....

.....[1]

(ii) Use Fig. 2.2 to determine the speed of the ball at a time of 0.40 s after it has been released.

speed = ... m s^{-1} [2]

(iii) On Fig. 2.2, sketch a graph to show the variation with time *t* of the distance *d* moved by the ball for negligible air resistance. You are not expected to carry out any further calculations. [3]

3 **(a)** The variation with extension x of the tension F in a spring is shown in Fig. 3.1.

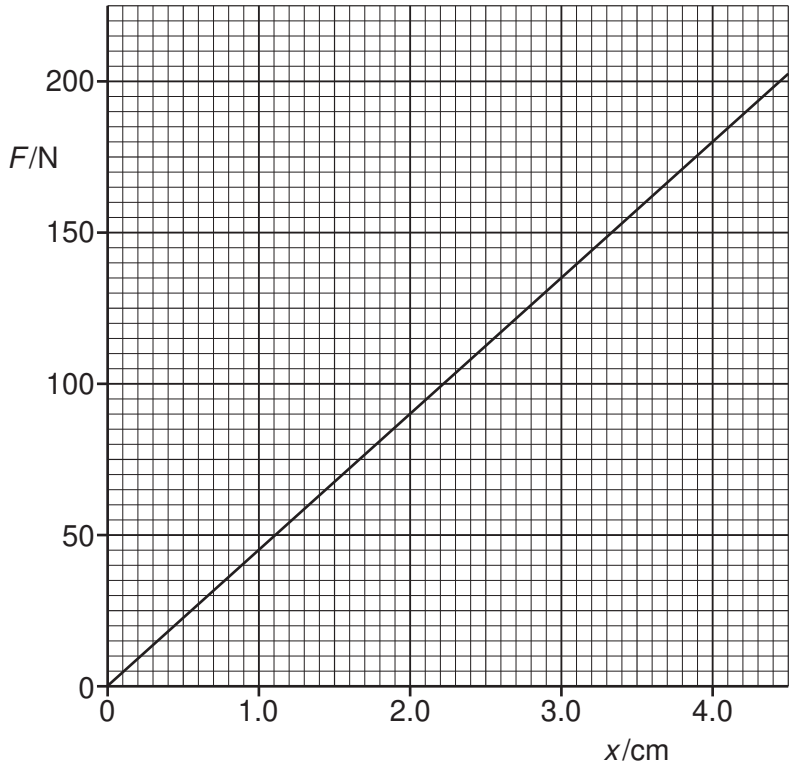

Fig. 3.1

Use Fig. 3.1 to calculate the energy stored in the spring for an extension of 4.0 cm.
Explain your working.

energy = ... J [3]

© UCLES 2010

(b) The spring in **(a)** is used to join together two frictionless trolleys A and B of mass M_1 and M_2 respectively, as shown in Fig. 3.2.

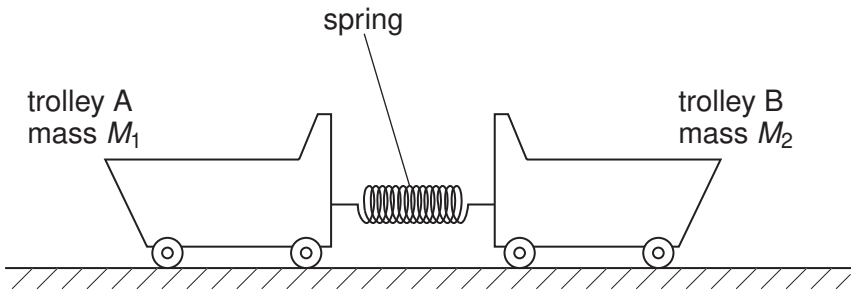

Fig. 3.2

The trolleys rest on a horizontal surface and are held apart so that the spring is extended.

The trolleys are then released.

(i) Explain why, as the extension of the spring is reduced, the momentum of trolley A is equal in magnitude but opposite in direction to the momentum of trolley B.

.....

.....

.....

.....[2]

(ii) At the instant when the extension of the spring is zero, trolley A has speed V_1 and trolley B has speed V_2.
Write down

1. an equation, based on momentum, to relate V_1 and V_2,

.....

.....[1]

2. an equation to relate the initial energy E stored in the spring to the final energies of the trolleys.

.....

.....[1]

© UCLES 2010

(iii) **1.** Show that the kinetic energy E_K of an object of mass m is related to its momentum p by the expression

$$E_K = \frac{p^2}{2m}.$$

[1]

2. Trolley A has a larger mass than trolley B.
Use your answer in **(ii) part 1** to deduce which trolley, A or B, has the larger kinetic energy at the instant when the extension of the spring is zero.

.....

.....[1]

© UCLES 2010

4 **(a)** State what is meant by the *diffraction* of a wave.

.....

.....

.....[2]

(b) A laser produces a narrow beam of coherent light of wavelength 632 nm. The beam is incident normally on a diffraction grating, as shown in Fig. 4.1.

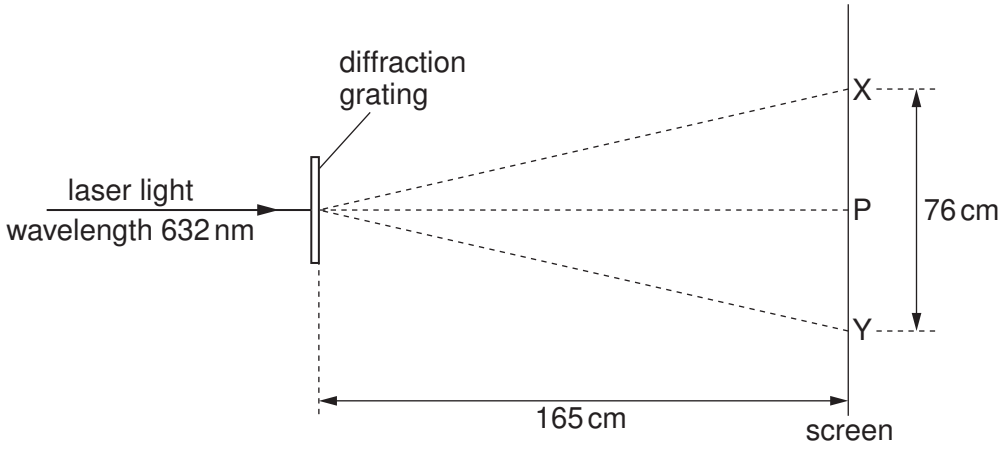

Fig. 4.1

Spots of light are observed on a screen placed parallel to the grating. The distance between the grating and the screen is 165 cm.
The brightest spot is P. The spots formed closest to P and on each side of P are X and Y.
X and Y are separated by a distance of 76 cm.
Calculate the number of lines per metre on the grating.

number per metre = ... [4]

(c) The grating in **(b)** is now rotated about an axis parallel to the incident laser beam, as shown in Fig. 4.2.

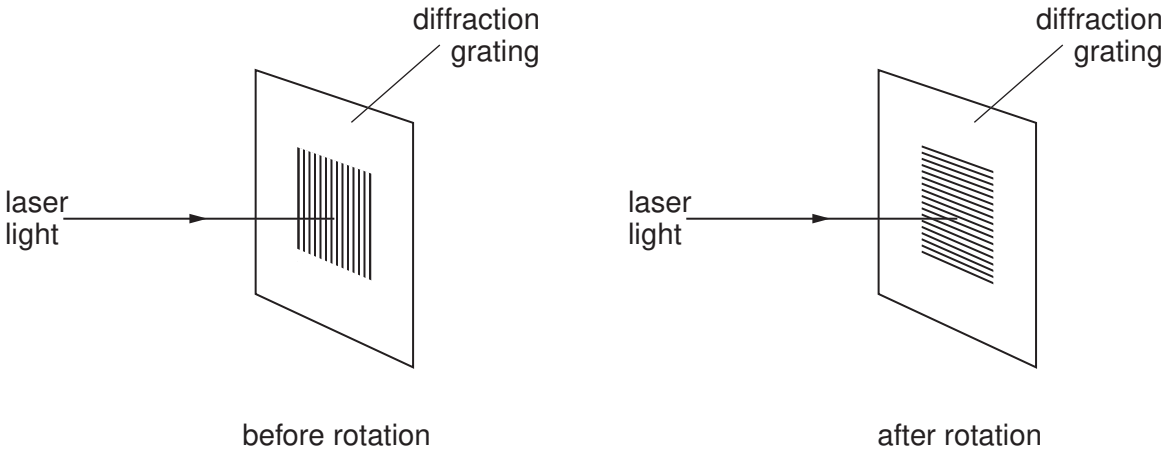

Fig. 4.2

State what effect, if any, this rotation will have on the positions of the spots P, X and Y.

.....

.....

.....

.....[2]

(d) In another experiment using the apparatus in **(b)**, a student notices that the distances XP and PY, as shown in Fig. 4.1, are not equal.
Suggest a reason for this difference.

.....

.....[1]

© UCLES 2010

5 **(a)** State what is meant by an *electric field*.

.....

.....[1]

(b) The electric field between an earthed metal plate and two charged metal spheres is illustrated in Fig. 5.1.

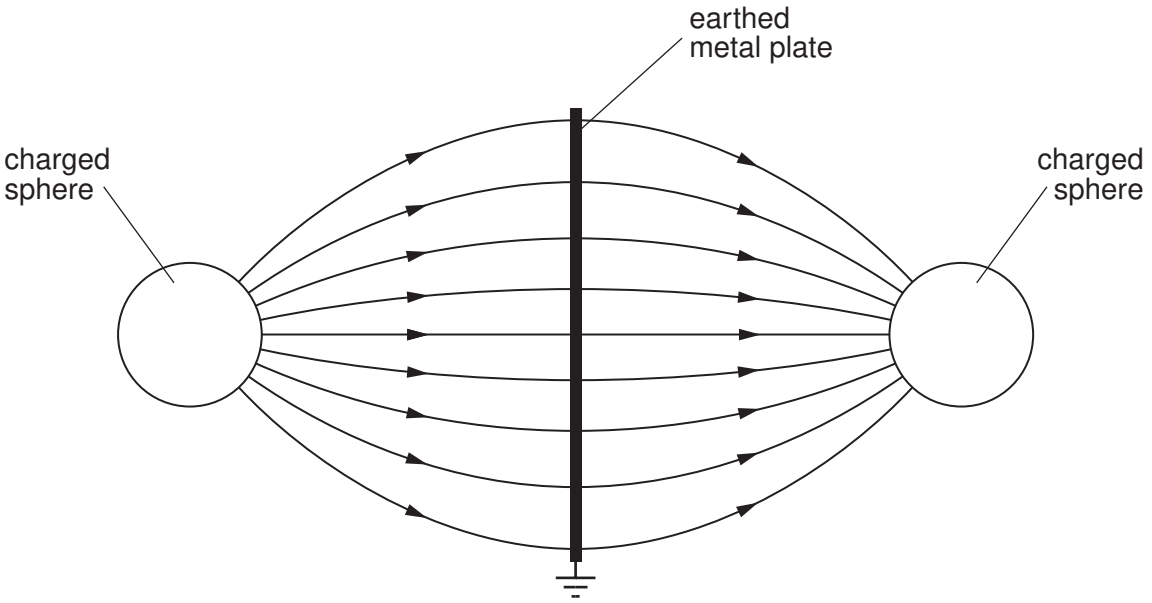

Fig. 5.1

(i) On Fig. 5.1, label each sphere with (+) or (–) to show its charge. [1]

(ii) On Fig. 5.1, mark a region where the magnitude of the electric field is

1. constant (label this region C), [1]

2. decreasing (label this region D). [1]

(c) A molecule has its centre P of positive charge situated a distance of 2.8×10^{-10} m from its centre N of negative charge, as illustrated in Fig. 5.2.

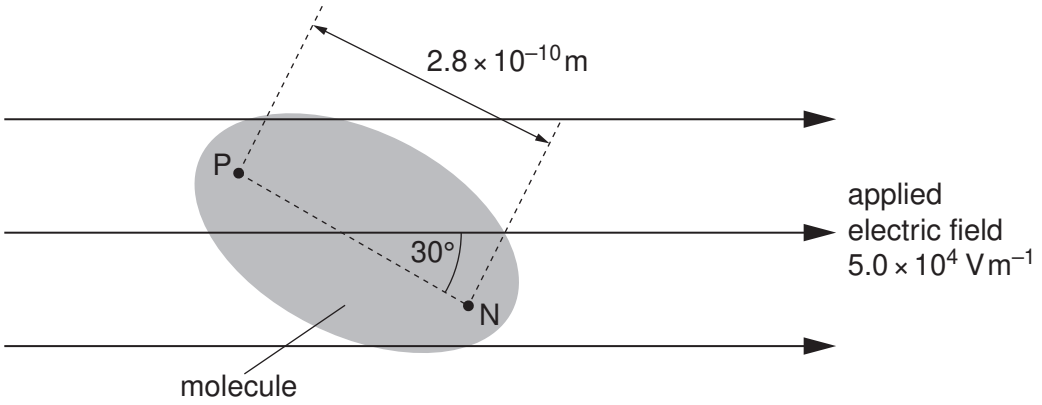

Fig. 5.2

The molecule is situated in a uniform electric field of field strength 5.0×10^4 V m^{-1}. The axis NP of the molecule is at an angle of 30° to this uniform applied electric field.
The magnitude of the charge at P and at N is 1.6×10^{-19} C.

(i) On Fig. 5.2, draw an arrow at P and an arrow at N to show the directions of the forces due to the applied electric field at each of these points. [1]

(ii) Calculate the torque on the molecule produced by the forces in **(i)**.

torque = ... N m [2]

© UCLES 2010

6 An electric heater is to be made from nichrome wire. Nichrome has a resistivity of $1.0 \times 10^{-6}\,\Omega\,m$ at the operating temperature of the heater.
The heater is to have a power dissipation of 60 W when the potential difference across its terminals is 12 V.

(a) For the heater operating at its designed power,

(i) calculate the current,

current = ... A [2]

(ii) show that the resistance of the nichrome wire is 2.4 Ω.

[2]

(b) Calculate the length of nichrome wire of diameter 0.80 mm required for the heater.

length = ... m [3]

© UCLES 2010

(c) A second heater, also designed to operate from a 12V supply, is constructed using the same nichrome wire but using half the length of that calculated in **(b)**.
Explain quantitatively the effect of this change in length of wire on the power of the heater.

.....

.....

.....

.....[3]

7 One of the isotopes of uranium is uranium-238 ($^{238}_{92}$U).

(a) State what is meant by *isotopes*.

.....

.....

.....[2]

(b) For a nucleus of uranium-238, state

(i) the number of protons,

number = ... [1]

(ii) the number of neutrons.

number = ... [1]

(c) A uranium-238 nucleus has a radius of 8.9×10^{-15} m.

Calculate, for a uranium-238 nucleus,

(i) its mass,

mass = ... kg [2]

(ii) its mean density.

density = ... kg m^{-3} [2]

© UCLES 2010

(d) The density of a lump of uranium is $1.9 \times 10^4 \text{ kg m}^{-3}$.
Using your answer to **(c)(ii)**, suggest what can be inferred about the structure of the atom.

.....

.....

.....[2]

BLANK PAGE

© UCLES 2010

BLANK PAGE

Permission to reproduce items where third-party owned material protected by copyright is included has been sought and cleared where possible. Every reasonable effort has been made by the publisher (UCLES) to trace copyright holders, but if any items requiring clearance have unwittingly been included, the publisher will be pleased to make amends at the earliest possible opportunity.

University of Cambridge International Examinations is part of the Cambridge Assessment Group. Cambridge Assessment is the brand name of University of Cambridge Local Examinations Syndicate (UCLES), which is itself a department of the University of Cambridge.

© UCLES 2010